

DS252C-48DC/G

- 2-poles surge protector 48 Vdc
- Type 1 and Type 2 application
- In 25 kA / Imax 70 kA
- Remote signaling
- Iimp 25 kA
- IEC 61643-11 and EN61643-11 compliance

Electrical Characteristics		
SPD type *following IEC test*		1+2
Network		48 Vdc
Nominal line voltage	*Un*	48 Vdc
Nominal DC voltage	*Un-dc*	48 Vdc
Max. DC operating voltage	*Uc*	75 Vdc
Operating current *Continious current at Uc*	*Ic*	none
Follow current	*If*	None
Nominal discharge current *15 x 8/20 µs impulses*	*In*	25 kA
Max. discharge current *max. withstand @ 8/20 µs by pole*	*Imax*	70 kA
Total Maximal discharge current *max. total withstand @ 8/20 µs*	*Imax Total*	140 kA
Impulse current by pole *max. withstand 10/350µs by pole*	*Iimp*	25 kA
Total lightning current *max. total withstand @ 10/350µs*	*Itotal*	50 kA
Connection mode(s)		+/- and +/PE
Protection mode(s)		Common/Differential mode
Protection level L/N *@ In (8/20µs)*	*Up L/N*	0.5 kV
Protection level L/PE *@ In (8/20µs)*	*Up L/PE*	1.5 kV
Protection level CM/DM *@ In (8/20µs)*	*Up mc/ md*	1.5/0.5 kV
Specific energy by pole *max. withstand 10/350 µs*	*W/R*	156 kJ/ohm
Internal Thermal protection		Yes

Mechanical Characteristics		
Technology		MOV + GDT
SPD configuration		2 poles
Connection to Network		By screw terminals : 6-35 mm² / by bus
Format		1-pole modular box
Mounting		Symmetrical rail 35 mm (EN60715)
Housing material		Thermoplastic UL94-V0
Operating temperature		-40/+85°C
Protection rating		IP20
Failsafe behavior		Disconnection
Disconnection indicator		1 mechanical indicator
Remote signaling of disconnection		Output on changeover contact
Dimensions		See diagram

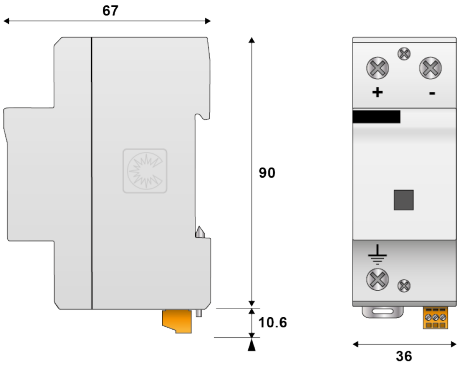

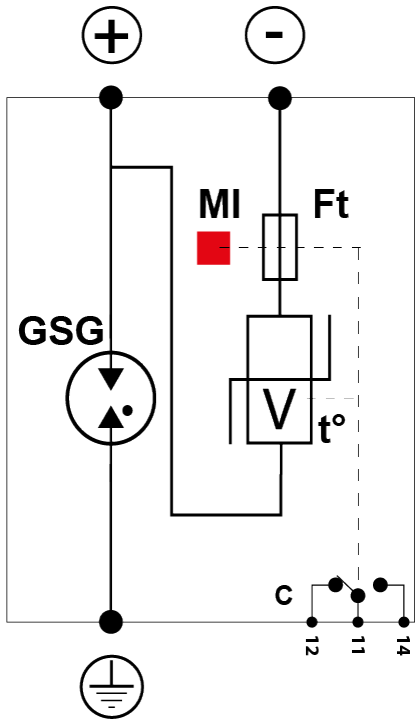

V: High-energy varistor
GSG: Specific gas tube
Ft: Thermal fuse
C: Remote signaling contact
t°: Thermal disconnection system
MI: Disconnection indicator

Disconnectors		
Thermal disconnector		Internal
Fuses		Fuses type gG - 315 A
Standards		
Standards compliance		IEC 61643-11 / EN 61643-11 / UL1449 4ed.
Certification		EAC
Part Number		3415