

DS254E-300/G

- Type 1 + 2 unipolar surge protector
- Iimp total: 100 kA on 10/350µs impulse
- Imax : 140 kA on 8/20µs impulse
- Internal disconnections, status indicators
- Remote signaling
- IEC 61643-11, EN 61643-11 and UL1449 ed.4 compliance

Electrical Characteristics		
SPD type *following IEC test*		1+2
Network		230/400 V 3-phase+N
AC system		TT-TNS
Nominal line voltage	*Un*	230/400 Vac
Max. AC operating voltage L-N	*Uc*	330 Vac
Max. load current	*IL*	100 A
Temporary Over Voltage (TOV) Charasteristics - 5 sec. *without disconnection*	*UT*	335 Vac withstand
Temporary Over Voltage (TOV) Charasteristics - 120 mn *without disconnection or with safety disconnection*	*UT*	440 Vac disconnection
Temporary Over Voltage N/PE (TOV HT) *without disconnection or with safety disconnection*	*UT*	1200 V/300A/200 ms withstand
Residual Current *Leakage current to Ground*	*Ipe*	None
Operating current *Continious current at Uc*	*Ic*	2 mA
Follow current	*If*	None
Nominal discharge current *15 x 8/20 µs impulses*	*In*	70 kA
Max. discharge current *max. withstand @ 8/20 µs by pole*	*Imax*	140 kA
Impulse current by pole *max. withstand 10/350µs by pole*	*Iimp*	25 kA
Total lightning current *max. total withstand @ 10/350µs*	*Itotal*	100 kA
Admissible short-circuit current	*Isccr*	50000 A
Connection mode(s)		L/N and N/PE
Protection mode(s)		Common/Differential mode
Protection level L/N *@ In (8/20µs)*	*Up L/N*	2.5 kV
Protection level N/PE *@ In (8/20µs)*	*Up N/PE*	1.5 kV
Specific energy by pole *max. withstand 10/350 µs*	*W/R*	156 kJ/ohm
Internal short circuit protection		No
Internal Thermal protection		Yes

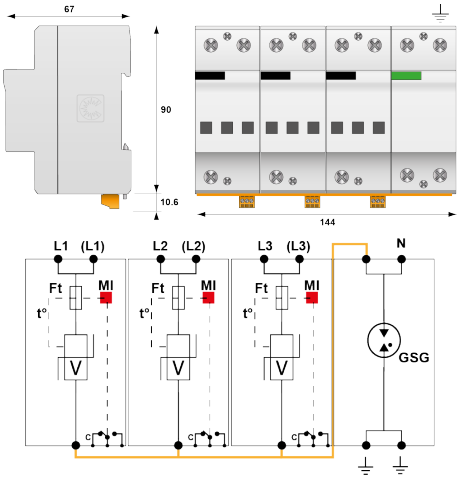

V: High-energy varistor
GSG: Specific gas tube
Ft: Thermal fuse
C: Remote signaling contact
t°: Thermal disconnection system
MI: Disconnection indicator

Mechanical Characteristics		
Technology		MOV
SPD configuration		3-phase+Neutral
Connection to Network		By screw terminals : 6-35 mm² / by bus
Format		1-pole modular box assembled
Mounting		Symmetrical rail 35 mm (EN60715)
Housing material		Thermoplastic UL94-V0
Operating temperature		-40/+85°C
Protection rating		IP20
Failsafe behavior		Disconnection
Disconnection indicator		3 mechanical indicators by pole
Remote signaling of disconnection		Output on changeover contact
Dimensions		See diagram
Disconnectors		
Thermal disconnector		Internal
Installation ground fault breaker		Type 'S' or delayed
Fuses		Fuses type gG - 315 A
Standards		
Standards compliance		IEC 61643-11 / EN 61643-11 / UL1449 4ed.
Certification		EAC
Part Number		3411