

DS42-280

- Type 2 AC Multipolar surge protector
- In : 20 kA
- Imax total : 80 kA
- Pluggable module for each phase
- Remote signaling option
- NF EN 61643-11, CEI 61643-11 compliance
- UL1449 ed.20

Electrical Characteristics		
SPD type *following IEC test*		2
Network		230 V single-phase
AC system		TN
Nominal line voltage	*Un*	230 Vac
Max. AC operating voltage L-N	*Uc*	280 Vac
Temporary Over Voltage (TOV) Charasteristics - 5 sec. *without disconnection*	*UT*	335 Vac withstand
Temporary Over Voltage (TOV) Charasteristics - 120 mn *without disconnection or with safety disconnection*	*UT*	440 Vac disconnection
Residual Current *Leakage current to Ground*	*Ipe*	< 1 mA
Operating current *Continious current at Uc*	*Ic*	0.5 mA
Follow current	*If*	None
Nominal discharge current *15 x 8/20 µs impulses*	*In*	20 kA
Max. discharge current *max. withstand @ 8/20 µs by pole*	*Imax*	40 kA
Total Maximal discharge current *max. total withstand @ 8/20 µs*	*Imax Total*	80 kA
Admissible short-circuit current	*Isccr*	25000 A
Connection mode(s)		L/PE and N/PE
Protection mode(s)		Common mode
Protection level L/PE *@ In (8/20µs)*	*Up L/PE*	1.3 kV
Protection level N/PE *@ In (8/20µs)*	*Up N/PE*	0.9 kV

Mechanical Characteristics		
Technology		MOV
SPD configuration		Single phase
Connection to Network		By screw terminals: 2.5-25 mm² / by bus
Format		Plug-in modular box
Mounting		Symmetrical rail 35 mm (EN60715)
Housing material		Thermoplastic UL94-V0
Operating temperature		-40/+85°C
Protection rating		IP20
Failsafe behavior		Disconnection
Disconnection indicator		1 mechanical indicator by pole
Spare module(s)		DSM40-280
Remote signaling of disconnection		option DS42S-280 : output on changeover contact
Dimensions		See diagram

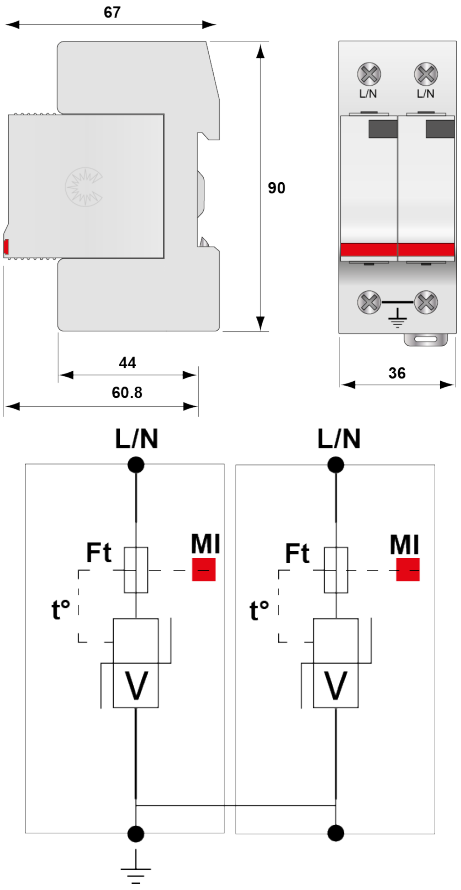

V: High-energy varistor
Ft: Thermal fuse
t°: Thermal disconnection system
MI: Disconnection indicator

Disconnectors		
Thermal disconnector		Internal
Installation ground fault breaker		Type 'S' or delayed
Fuses		Fuses type gG - 50 A
Standards		
Standards compliance		IEC 61643-11 / EN 61643-11 / UL1449 4ed.
Certification		UL / CSA /EAC
Part Number		461101