

DS500E-320

- Type 1+2 unipolar AC surge protector
- Iimp : 50 kA on 10/350µs impulse
- Imax : 200 kA on 8/20µs impulse
- Internal disconnecctions, status indicator and remote signaling
- IEC 61643-11 and EN 61643-11

Electrical Characteristics		
SPD type *following IEC test*		1+2
Network		230/400 V
Max. AC operating voltage L-N	*Uc*	320 Vac
Temporary Over Voltage (TOV) Charasteristics - 5 sec. *without disconnection*	*UT*	335 Vac withstand
Temporary Over Voltage (TOV) Charasteristics - 120 mn *without disconnection or with safety disconnection*	*UT*	440 Vac disconnection
Operating current *Continious current at Uc*	*Ic*	< 3 mA
Follow current	*If*	None
Nominal discharge current *15 x 8/20 µs impulses*	*In*	50 kA
Max. discharge current *max. withstand @ 8/20 µs by pole*	*Imax*	200 kA
Impulse current by pole *max. withstand 10/350µs by pole*	*Iimp*	50 kA
Admissible short-circuit current	*Isccr*	50000 A
Connection mode(s)		L/N and L/PE
Protection level *@ In (8/20µs)*	*Up*	1.8 kV
Specific energy by pole *max. withstand 10/350 µs*	*W/R*	625 kJ/ohm
Internal short circuit protection		No
Internal Thermal protection		Yes
Mechanical Characteristics		
Technology		MOV
Connection to Network		By screw terminals : 6-35 mm²
Format		1-pole modular box
Mounting		Symmetrical rail 35 mm (EN60715)
Housing material		Thermoplastic UL94-V0
Operating temperature		-40/+85°C
Protection rating		IP20
Failsafe behavior		Disconnection
Disconnection indicator		1 mechanical indicator
Remote signaling of disconnection		Output on changeover contact
Dimensions		See diagram
Disconnectors		
Thermal disconnector		Internal
Installation ground fault breaker		Type 'S' or delayed
Fuses		Fuses Type gG - 500 A

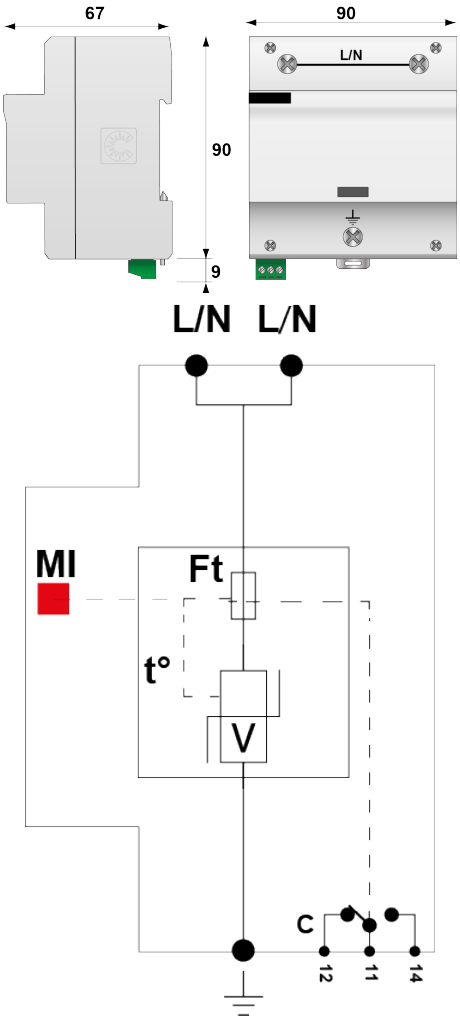

V: High-energy varistor
Ft: Thermal fuse
C: Remote signal contact
t°: Thermal disconnection system
MI: Disconnection indicator

Standards		
Standards compliance		IEC 61643-11 / EN 61643-11
Certification		EAC
Part Number		63166